IOPscience iopscience.iop.org

Home Search Collections Journals About Contact us My IOPscience

The Coulomb blockade in multi-gated-small-junction systems

This article has been downloaded from IOPscience. Please scroll down to see the full text article.

1993 J. Phys.: Condens. Matter 5 7259

(http://iopscience.iop.org/0953-8984/5/39/013)

View the table of contents for this issue, or go to the journal homepage for more

Download details:
IP Address: 171.66.16.96
The article was downloaded on 11/05/2010 at 01:54

Please note that terms and conditions apply.

J. Phys.: Condens. Matter 5 (1993) 7259–7268. Printed in the UK

The Coulomb blockade in multi-gated-small-junction systems

G Y Hu and R F O'Connell

Department of Physics and Astronomy, Louisiana State University, Baton Rouge, LA 70803-4001, USA

Received 4 June 1993

Abstract. An analytic solution to the electrostatic problem of a multi-gated-small-junction system in the semiclassical regime is presented. As an example, the formula derived is used to analyse the stable domain for the Coulomb blockade at zero DC voltage and zero temperature for systems with three-gated small junctions, which models various important devices such as the single-electron pump and double dots.

1. Introduction

Due to progress in nanoscale fabrication techniques, the study of correlated single-charge tunnelling (single electronics) has recently become a field of widespread interest [1]. In a single small tunnel junction, having capacitance C_J such that the charging energy $e^2/2C_J$ exceeds the characteristic energy k_BT of thermal fluctuations, it is found that the Coulomb blockade, a suppression of single charge tunnelling, dramatically reduces the current at voltages $V < e/2C_J$. More recently, much attention has been focused on the multi-gated-small-junction (MGSJ) systems [2–12], where several small tunnel junctions are fabricated in series with the regions (the islands) between them being controlled by gate voltages through gate capacitances (see figure 1). It is found that by capacitive charging of the island between any two junction barriers, the Coulomb blockade in a gated junction becomes controllable, which forms the basic idea of the single-electron device. To date many sophisticated multi-gated-junction devices have been built. Among them are the single-electron box [7] (1 junction + 1 gate), the single-electron transistor [5,6] (2 junctions + 1 gate), the single-electron pump [9] (3 junctions + 2 gates), and the single-electron turnstile [8] (4 junctions + 1 gate). The devices [1–4] are potentially useful for metrological applications such as the realization of a current standard.

The operating principle [2–4] of an MGSJ device can best be understood at zero temperature, where a charging state $\{n_1, n_2, \ldots\}$ of excess electrons on the islands becomes stable when the tunnelling of a single electron through the surrounding junctions is energetically unfavourable, and it can be changed in a controlled manner by manipulating the gate voltages so that a single electron moves in a designed way. It follows that the determination of the stable domain of a charging state $\{n_1, n_2, \ldots\}$ in the gate voltage space $\{U_1, U_2, \ldots\}$ at $T = 0$ is the crucial step in understanding the physics of the MGSJ systems. In principle, the stable domains can be exactly located by using basic electrostatics to evaluate the energy change ΔE_i due to the tunnelling of an electron through the ith junction ($i = 1, \ldots, N$), which requires the solution of a set of $2N - 1$ linear equations for the corresponding charges on the N junctions and $N-1$ gate capacitors. In the literature, several studies of the stable domains of the MGSJ systems appear for the cases of (i) infinitely large

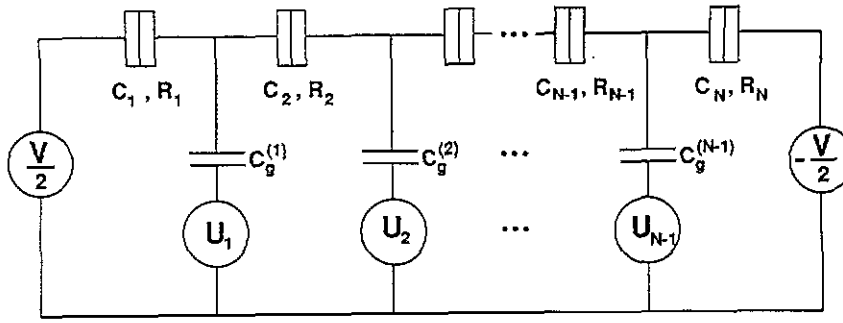

Figure 1. An N-gated-small-junction system consisting of N tunnelling junctions with capacitances $C_1, C_2, \ldots, C_N$, and tunnelling resistances $R_1, R_2, \ldots, R_N$. The end junctions are biased by a symmetrical voltage V, and $N-1$ islands between the tunnel junctions are coupled to gate voltages $U_1, U_2, \ldots, U_{N-1}$ through capacitors $C_g^{(1)}, C_g^{(2)}, \ldots, C_g^{(N-1)}$.

number of junctions [4], (ii) no gate voltages [2], (iii) negligibly small gate capacitances [3] C_g ($C_g \ll C_J$, where C_J is the junction capacitance), and (iv) extremely large gate capacitance C_g [11] ($C_g \gg C_J$). It is interesting to note that the latter two papers both study the $N = 3$ MGSJ systems, referred to as the single electron pump and double dot, respectively. For $T \to 0$, it is found that for the single electron pump [3] the stable domains in the gate voltage plane form a periodic lattice (which implies periodic Coulomb blockade oscillations in the conductance G), while for the double dot the authors of [11] concluded that the periodic structure in the conductance gives rise to a system of random peaks. Thus it is of great interest to study the $N = 3$ MGSJ systems in a more general manner and to see what happens at a finite ratio of C_g/C_J.

In this paper we do two things. First, we present a two-step operation scheme to solve the $2N-1$ linear equations appearing in the electrostatic problem of the N-gated-junction systems. Second, the general scheme is used to analyse the problem of the ($N = 3$)-gated-junction system analytically.

The rest of the paper is organized as follows. In section 2 we present a general study for the charge states in N-gated-junction systems. In section 3 analytic solutions for the ($N = 3$)-gated junctions are presented. In particular, we give a detailed study for systems with equal junction capacitance C_J. Our main results are summarized in the concluding section.

2. Charge states in a multi-gated-small-junction system

Consider an MGSJ system that consists of a linear array of N small junctions (see figure 1) with capacitances $C_1, C_2, \ldots, C_N$, and tunnel resistances $R_1, R_2, \ldots, R_N$. The end junctions are biased by a symmetrical voltage V, and the islands (total number $N-1$) between the N junctions are connected through capacitors $C_g^{(1)}, C_g^{(2)}, \ldots, C_g^{(N-1)}$ to the gate voltages $U_1, U_2, \ldots, U_{N-1}$. We assume that $R_i \gg R_k \equiv h/e^2$, which is the condition of weak coupling and ensures that, for an excess electron on an island, the Coulomb energy exceeds the energy uncertainty due to tunnelling or, in other words, the wave function of the excess electron is localized on the island. In the literature, in some instances the MGSJ system is named after the number of islands it contains [11], and in a number of other works for the $N = 2$, 3, and 4 MGSJ systems it has been referred to, respectively, as the single-electron transistor [5, 6], single electron pump [9], and single-electron turnstile [8].

We adopt the semiclassical model [2–4, 11, 12] to describe the MGSJ system. In this model the voltage V_j across the jth junction (or capacitor) is a classical variable calculated by $V_j = C_j Q_j$, where Q_j is the charge on the jth junction. The state of the system at a given time is then described by a set of $2N-1$ variables $\{Q_1, Q_2, \ldots, Q_N, Q_g^{(1)}, Q_g^{(2)}, \ldots, Q_g^{(N-1)}\}$, where $Q_g^{(k)}$ is the charge on the kth gate capacitor. The tunnelling of an electron, of charge $-e$, through a junction will change the charge distribution and thus all the voltage values of the junctions. It is convenient to describe the state of the system by another set of $2N-1$ charge variables $\{CV, C_g^{(1)}U_1, \ldots, C_g^{(N-1)}U_{N-1}, n_1 e, n_2 e, \ldots, n_{N-1}e\}$, where $C^{-1} = C_1^{-1} + C_2^{-1} + \ldots + C_N^{-1}$ and n_j is the number of excess electrons on the jth island. $\{Q_1, \ldots\}$ are related to $\{CV, \ldots\}$ by the charge conservation equations

$$Q_{i+1} - Q_i - Q_g^{(i)} = n_i e \qquad (i = 1,\ 2, \ldots,\ N-1) \tag{2.1}$$

and by Kirchhoff's equations

$$\frac{V}{2} = \sum_{j=1}^{i} \frac{Q_j}{C_j} - \frac{Q_g^{(i)}}{C_g^{(i)}} + U_i \qquad (i = 1,\ 2,\ \ldots,\ N-1) \tag{2.2}$$

$$V = \sum_{j=1}^{N} \frac{Q_j}{C_j}. \tag{2.3}$$

From $2N-1$ linear equations (2.1)–(2.3), the voltage drop across each of the junctions and gate capacitors can be determined for given values of V, $\{U_i\}$, and $\{n_i\}$. We note that equations similar to (2.1)–(2.3) have been previously obtained by Amman *et al* [12]. The difference here is that we have added, realistically, a gate voltage source for each of the gate capacitances. Also, we present an analytical way to solve (2.1)–(2.3) in the following.

In the simplest case, where gate voltages $\{U_i\}$ and capacitors $\{C_g^{(i)}\}$ are absent, the system reduces to N junctions in series [2], which can be described by N variables $\{Q_1, Q_2, \ldots, Q_N\}$ subject to the N linear equations (2.1) and (2.3) with $Q_g^{(i)} = 0$. These N linear equations can easily be solved by a substitution method, and the results are

$$Q_k = Q + eC \sum_{j=1}^{N-1} \sum_{m=j+1}^{N} \frac{n_j}{C_m} - e \sum_{j=1}^{k-1} n_j \qquad (k = 1,\ 2,\ \ldots,\ N) \tag{2.4}$$

where $Q = CV$ and where it is understood that the last term vanishes when $k = 1$. From (2.4), it is clear that a single electron tunnelling through one of the junctions will cause a change of the entire charge configuration $\{Q_1, Q_2, \ldots, Q_N\}$. Denoting the charge of the kth junction, after the tunnelling of an electron through the ith junction, as $Q_k^{(i\pm)} \equiv Q_k\{n_1, n_2, \ldots, n_{i-2}, n_{i-1} \pm 1, n_i \mp 1, n_{i+2}, \ldots, n_{N-1}\}$, where the $+(-)$ sign refers to backward (forward) tunnelling through the ith junction, a relationship between $Q_k^{i\pm}$ and Q_k can be derived directly. After collecting terms due to the change from n_{i-1} and n_i, to $n_{i-1} \pm 1$ and $n_i \mp 1$, respectively, we obtain from (2.4)

$$Q_k^{i\pm} = Q_k \mp 2Q_{ik}^C \tag{2.5a}$$

where Q_k is given by (2.4), and

$$Q_{ik}^C \equiv \tfrac{1}{2}e\big(\delta_{ik} - C/C_i\big). \tag{2.5b}$$

Another useful quantity, the energy change $\Delta E_k^{(i\pm)}$ of the kth junction due to the tunnelling of an electron through the ith junction can be conveniently evaluated from (2.5) as

$$\Delta E_k^{(i\pm)} = \big(1/2C_k\big)\Big\{\big[Q_k^{(i\pm)}\big]^2 - Q_k^2\Big\} = \big(2Q_{ik}^C/C_k\big)\big(\mp Q_k + Q_{ik}^C\big). \tag{2.6a}$$

In particular, for $k = i$,

$$\Delta E_i^{(i\pm)} = (e/C_i)(1 - C/C_i)[\mp Q_i + \tfrac{1}{2}e(1 - C/C_i)] \equiv (e/C_i)(1 - C/C_i)[\mp Q_i + Q_i^C]. \tag{2.6b}$$

From (2.5) and (2.6), one can directly obtain the internal energy change $\Delta\chi_i^{\pm}$ due to the tunnelling of an electron through the ith junction

$$\Delta\chi_i^{\pm} \equiv \sum_{k=1}^{N} \Delta E_k^{i\pm} = \frac{e}{C_i}\left[\mp(Q_i - Q) + \frac{e}{2}\left(1 - \frac{C}{C_i}\right)\right]. \tag{2.7}$$

In the literature it is common to add to the internal energy change the work done by the voltage source to give the total electrostatic energy [2]

$$\Delta W_i^{\pm} \equiv \Delta\chi_i^{\pm} \mp (C/C_i)eV = (e/C_i)[\mp Q_i + Q_i^C] \tag{2.8}$$

which is used to evaluate the single-electron tunnelling rate through the ith junction at $T = 0$. From (2.8), one then concludes that when $\Delta W_i^{\pm} > 0(|Q_i| < Q_i^C)$, the tunnelling of an electron through the ith junction at $T = 0$ is not allowed by virtue of the electrostatic energy consideration for the system, and the stable configuration of the charge $\{n_i, n_2, \ldots, n_{N-1}\}$ is thus maintained. On the other hand, one notices that the condition $\Delta W_i^{\pm} > 0$ from (2.8) is equivalent to the condition $\Delta E_i^{(i\pm)} > 0$ from (2.6*b*), which suggests that the latter can also be adopted as a rule to determine the single-electron tunnelling event at $T = 0$. Physically, the $\Delta E_i^{(i\pm)} > 0$ rule identified here is even more plausible, because it simply says that at $T = 0$ whether a single electron tunnels through the ith junction depends only on $\Delta E_i^{(i\pm)}$ which is the energy change of the ith junction due to the tunnelling of an electron through the ith junction. Since $\Delta E_i^{(i\pm)}$ is easier to evaluate than $\Delta W_i^{\pm}$ (which involves a sum over $\Delta E_k^{(i\pm)}$), we will adopt the $\Delta E_i^{(i\pm)} > 0$ rule as the $T = 0$ Coulomb blockade condition in this paper.

In general, we find that the $2N - 1$ linear equations (2.1)–(2.3) an be conveniently solved through a two-step operation. First, by introducing the effective charge

$$\tilde{Q}_g^{(i)} = Q_g^{(i)} - n_i e \tag{2.9}$$

we rewrite (2.1) as

$$Q_i - Q_{i+1} = -\tilde{Q}_g^{(i)} \qquad i = 1, 2, \ldots, N - 1. \tag{2.10}$$

Using (2.3) and (2.10), similar to (2.4), we obtain solutions

$$Q_k = Q - C\sum_{j=1}^{N-1}\sum_{m=j+1}^{N}\frac{\tilde{Q}_g^{(j)}}{C_m} + \sum_{j=1}^{k-1}\tilde{Q}_g^{(j)} \qquad (k = 1, 2, \ldots, N). \tag{2.11}$$

Thus, we have obtained an expression for each junction charge in terms of the effective charges. It now remains to determine the latter. Next, we use (2.9) again to rewrite (2.2) as

$$\frac{V}{2} = \sum_{k=1}^{i}\frac{Q_k}{C_k} - \frac{\tilde{Q}_g^{(i)} + \tilde{n}_i e}{C_g^{(i)}} \qquad (i = 1, 2, \ldots, N - 1) \tag{2.12}$$

where

$$\tilde{n}_i = n_i - C_g^{(i)}U_i/e. \tag{2.13}$$

Substituting (2.11) into (2.12), we obtain $N-1$ linear equations for $\{\tilde{Q}_g^{(k)}\}$ as a function of $\{\tilde{n}_k\}$ and V. After some algebra, we obtain from (2.11) and (2.12)

$$\tilde{Q}_g^{(k)} = \sum_{m=1}^{N-1} (M^{-1})_{km} \left[\tilde{n}_m e + C_g^{(l)} V \left(\frac{1}{2} - \sum_{j=1}^{m} \frac{C}{C_j} \right) \right] \tag{2.14a}$$

where $\mathbf{M}^{-1}$ is the inverse of the $(N-1)\times(N-1)$ matrix $\mathbf{M}$, which has elements

$$M_{mn} = -\delta_{mn} + C_g^{(m)} \sum_{k=1}^{m} \left(\sum_{j=1}^{k-1} \frac{\delta_{nj}}{C_k} - \sum_{j=n+1}^{N} \frac{C}{C_k C_j} \right). \tag{2.14b}$$

Thus (2.11), supplemented by (2.14), is a key result, as it constitutes an expression for each junction charge in terms of the island charges and gate voltages. We now use these results to determine the conditions for the Coulomb blockade. As stated earlier, in order to study the condition for the Coulomb blockade of the system, one needs to evaluate $\Delta E_i^{(i\pm)}$ of (2.6*b*). For this purpose, we first derive, from (2.11) and (2.14), an expression, similar to (2.5*a*), for the charge $Q_i^{(i\pm)}$ of the ith junction after the tunnelling of an electron through the ith junction in the form

$$Q_i^{(i\pm)} = Q_i \mp 2Q_i^C \tag{2.15a}$$

where Q_i is now given by (2.11), supplemented by (2.14), and

$$Q_i^C = \frac{e}{2} \left(\sum_{j=1}^{i-1} - \sum_{j=1}^{N1} \sum_{m=j+1}^{N} \frac{C}{C_m} \right) \left[(M^{-1})_{ij} - (M_{j,i-1}^{-1}) \right] \tag{2.15b}$$

after which we obtain

$$\Delta E_i^{(i\pm)} \equiv (1/2C_i) \left\{ \left[Q_i^{(i\pm)} \right]^2 - Q_i^2 \right\} = (2Q_i^C/C_i) \left[\mp Q_i + Q_i^C \right]. \tag{2.15c}$$

When gate capacitances $\{C_g^{(k)}\}$ and gate voltages $\{U_k\}$ are absent, it is straightforward to show that (2.11) and (2.15) reduce, respectively, to (2.4) and (2.6). Also, if the gate capacitance is much smaller than the junction capacitance, then (2.14*b*) reduces to $M_{mn} \simeq -\delta_{mn}$ and (2.14*a*) becomes $\tilde{Q}_g^{(k)} \simeq -\tilde{n}_k$, where $\tilde{n}_k$ is given by (2.13). This latter approximation has been used in many of the studies appearing in the literature [3]. Our exact solutions (2.11) and (2.14) to the electrostatic problem (2.1)–(2.3) for MGSJ systems, together with the energy change (2.15), provide a full description of the problem. In the following, we apply (2.9)–(2.14) to the special cases $N = 2$ and $N = 3$.

When $N = 2$ (the single-electron transistor[2]), $\{\tilde{Q}_g^{(k)}, C_g^{(k)}, U_k, \tilde{n}_k\}$ has only one component, which will be denoted as $\{\tilde{Q}_g, C_g, U, \tilde{n}\}$. In this case, (2.14) and (2.11) reduce respectively, to

$$\tilde{Q}_g = (1/C_\Sigma) \left[\tfrac{1}{2}(C_2 - C_1) C_g V - (C_1 + C_2) \tilde{n} e \right] \tag{2.16}$$

and

$$Q_k = Q + (-1)^k (1 - C/C_k) \tilde{Q}_g \tag{2.17}$$

where $C_\Sigma = C_1 + C_2 + C_g$ and $C^{-1} = C_1^{-1} + C_2^{-1}$. Also (2.15) reduces to

$$\Delta E_i^{(i\pm)} = (e^2 C_i / C_\Sigma^2) \left[\mp(-1)^i \tilde{n} + \tfrac{1}{2} \right]. \tag{2.18}$$

Equations (2.16)–(2.18) are well known results in the literature [1,2]. Next we present a non-trivial case of our formalism, the $N = 3$ case.

When $N = 3$, the matrix elements of (2.14b) reduce to

$$M_{mk} = -\delta_{mk}\Big[1 + C_g^{(m)}(C/C_2)(\delta_{m1}/C_1 + \delta_{m2}/C_3)\Big] - C_g^{(m)}C/C_1C_3 \qquad m,\ k = 1,\ 2. \tag{2.19}$$

It follows that the inverse of the matrix $\mathbf{M}$ defined by (2.19) can be worked out manually and that one can write (2.14a) explicitly as

$$\tilde{Q}_g^{(i)} = D^{(i)}/D \qquad (i = 1, 2) \tag{2.20a}$$

where

$$D = M_{11}M_{22} - M_{12}M_{21} \tag{2.20b}$$

$$D^{(1)} = M_{22}\big[\tilde{n}_1 e + C_g^{(1)}V\big(\tfrac{1}{2} - C/C_1\big)\big] - M_{12}\big[\tilde{n}_2 e + C_g^{(2)}V\big(C/C_3 - \tfrac{1}{2}\big)\big] \tag{2.20c}$$

$$D^{(2)} = M_{11}\big[\tilde{n}_2 e + C_g^{(2)}V\big(C/C_3 - \tfrac{1}{2}\big)\big] - M_{21}\big[\tilde{n}_1 e + C_g^{(1)}V\big(\tfrac{1}{2} - C/C_1\big)\big] \tag{2.20d}$$

and M_{mk} is given by (2.19). Also, (2.11) reduces explicitly to

$$Q_1 = Q - \tilde{Q}_g^{(1)}(1 - C/C_1) - \tilde{Q}_g^{(2)}C/C_3 \tag{2.21a}$$

$$Q_2 = Q + \tilde{Q}_g^{(1)}C/C_1 - \tilde{Q}_g^{(2)}C/C_3 \tag{2.21b}$$

$$Q_3 = Q + \tilde{Q}_g^{(1)}C/C_1 + \tilde{Q}_g^{(2)}(1 - C/C_3). \tag{2.21c}$$

The energy change $\Delta E_i^{(i\pm)}$ of (2.15) due to the tunnelling of an electron through the ith junction can be obtained by using (2.20) and (2.21). At $V = 0$, the results take the following simple forms:

$$\Delta E_i^{(i\pm)} = (2Q_i^C/C_1)\big[\mp Q_i + Q_i^C\big] \tag{2.22a}$$

where

$$Q_1^C = (e/2D)\big[M_{22}(C/C_2 + C/C_3) - M_{21}C/C_3\big] \tag{2.22b}$$

$$Q_2^C = (e/2D)\big[(M_{11} + M_{21})C/C_3 + (M_{22} + M_{12})C/C_1\big] \tag{2.22c}$$

$$Q_3^C = (e/2D)\big[M_{11}(C/C_1 + C/C_2) - M_{12}C/C_1\big]. \tag{2.22d}$$

We will analyse the general formalism (2.19)–(2.22) for the $N = 3$ MGSJ systems in the next section.

3. Coulomb blockade in an ($N = 3$)-gated-small-junction system

In this section we use our exact solutions (2.19)–(2.22) to analyse the Coulomb blockade in and ($N = 3$)-gated-small-junction system at $V = 0$ and $T = 0$. For ease of discussion, we assume equal junction capacitances $C_1 = C_2 = C_3 = C_j$ but with no restriction on the values of $C_g^{(1)}$ and $C_g^{(2)}$. This is a case of great experimental and theoretical interest [3, 9, 11]. When $C_j \gg C_g^{(1)}, C_g^{(2)}$, the system corresponds to the single electron pump [3, 9] while for $C_j \ll C_g^{(1)}, C_g^{(2)}$, it is referred to as the double quantum dot [11].

When $C_1 = C_2 = C_3 = C_j$, the combined results of (2.19)–(2.22) at $V = 0$ take a simple form

$$Q_1 = (e/3D)\big[(2 + \beta)(n_1 - x) + n_2 - (\beta/\alpha)y\big] \tag{3.1}$$

$$Q_2 = (e/3D)\big\{(1 + \alpha)\big[n_2 - (\beta/\alpha)y\big] - (1 + \beta)(n_1 - x)\big\} \tag{3.2}$$

$$Q_3 = (e/3D)\big\{n_1 - x + (2 + \alpha)\big[n_2 - (\beta/\alpha)y\big]\big\} \tag{3.3}$$

where

$$x = C_g^{(1)} U_1/e \qquad y = C_g^{(2)} U_2/2 \qquad \alpha = C_g^{(1)}/C_j \qquad \beta = C_g^{(2)}/C_j \tag{3.4}$$

and $D = 1 + \frac{1}{3}(2\alpha + 2\beta + \alpha\beta)$.

As usual, at $T = 0$ when $\Delta E_i^{\pm} > 0$ the tunnelling of an electron through the ith junction is blocked. Based on this consideration, we use (2.22) and (3.1) to find the condition for an island state (n_1, n_2) to be stable with respect to the tunnelling of an electron through any of the junctions in the system. The results are

$$(2+\beta)n_1 + n_2 - 1 - \tfrac{1}{2}\beta < (2+\beta)x + y < (2+\beta)n_1 + n_2 + 1 + \tfrac{1}{2}\beta \tag{3.5}$$

$$(1+\alpha)n_2 - (1+\beta)n_1 - 1 - \tfrac{1}{2}(\alpha+\beta) < \left(1+\alpha\right)y - (1+\beta)x < (1+\alpha)n_1 - (1+\beta)n_2 + 1 + \tfrac{1}{2}(\alpha+\beta) \tag{3.6}$$

$$n_1 + (2+\alpha)n_2 - 1 - \tfrac{1}{2}\alpha < x + (2+\alpha)y < n_1 + (2+\alpha)n_2 + 1 + \tfrac{1}{2}\alpha. \tag{3.7}$$

The six inequalities contained in (3.5)–(3.7) define a region: the stable domain in the U_1–$U_2(x$–$y)$ plane within which the island state (n_1, n_2) for the excess electrons is stable. We note that in the limit α, $\beta \to 0$, (3.5)–(3.7) reduce to the results of Pothier *et al* [3, 9] (in particular, see figure 14 of [3]) for the stable domains of their single electron pump.

In general, from (3.5)–(3.7) we find that the shape of a stable domain strongly depends on the values of α and β. Also, for any given values of α and β, a fixed shape of stable domain fills the entire x–y plane with rectangular transitional symmetry, where the central coordinates of each domain are $(n_1, \alpha/\beta n_2)$. We now present detailed studies for various interesting cases of α and β.

First, we consider the $\alpha = \beta$ case where the stable domains in the x–y plane possess square translational symmetry. The shape of the stable domain can be worked out using (3.5)–(3.7) at $n_1 = n_2 = 0$. The results are presented in figure 2(a), where we plot the (0, 0) domain for $\alpha = 0, 0.1, 1, 10, \infty$. Also, a global view of the stable domains is illustrated by figure 2(b), where we plot the $\alpha = 1$ case as an example. As can be seen from the figure, in general the stable domain has a hexagonal shape (except for the $\alpha = \infty$ case which converges to a square). The vertices of the hexagons are special (triple) points in the U_1–U_2 plane where three neighbouring domains share a common point, and the presence of these triple points is the basis of the single electron pump [3]. Our results seen in figure 2 clarify two basic points: (i) the distance x_p between two neighbouring triple points depends on the value of α, which has an analytical form $x_p = 1/(3+\alpha)$; (ii) for large enough α the two neighbouring triple points are practically unidentifiable and the pump ceases to operate.

Next, we study the $\alpha \neq \beta$ case. Two examples of the stable domains, as calculated by (3.5)–(3.7), are presented in figure 3: (a) $\alpha = 0.1$, $\beta = 0.25$; (b) $\alpha = 10$, $\beta = 25$. As can be observed from the figure, the distance between the neighbouring domains in the x–y (defined by (3.4)) plane along the y direction equals α/β (1 for the $\alpha = \beta$ case). As a result, the smaller the value of α/β the more frequent will the conductance peak of Coulomb blockade oscillations appear as a function of U_2. This is reasonable, because in the $C_g^{(2)} \gg C_g^{(1)} (\alpha/\beta \to 0)$ limit one expects the second island to act like an external lead, and the Coulomb blockade is no longer operative. Another consequence of the periodicity of α/β along the y direction is that the conductance oscillates along the $U_1 = U_2 (x = y)$ line in different ways. When α/β is a rational number the conductance still oscillates periodically, whereas when α/β is an irrational number G oscillates non-periodically but in a predictable way. Thus, we have provided a deterministic explanation for the 'random peaks' in the conductance oscillations for the double-dot system discussed in [11].

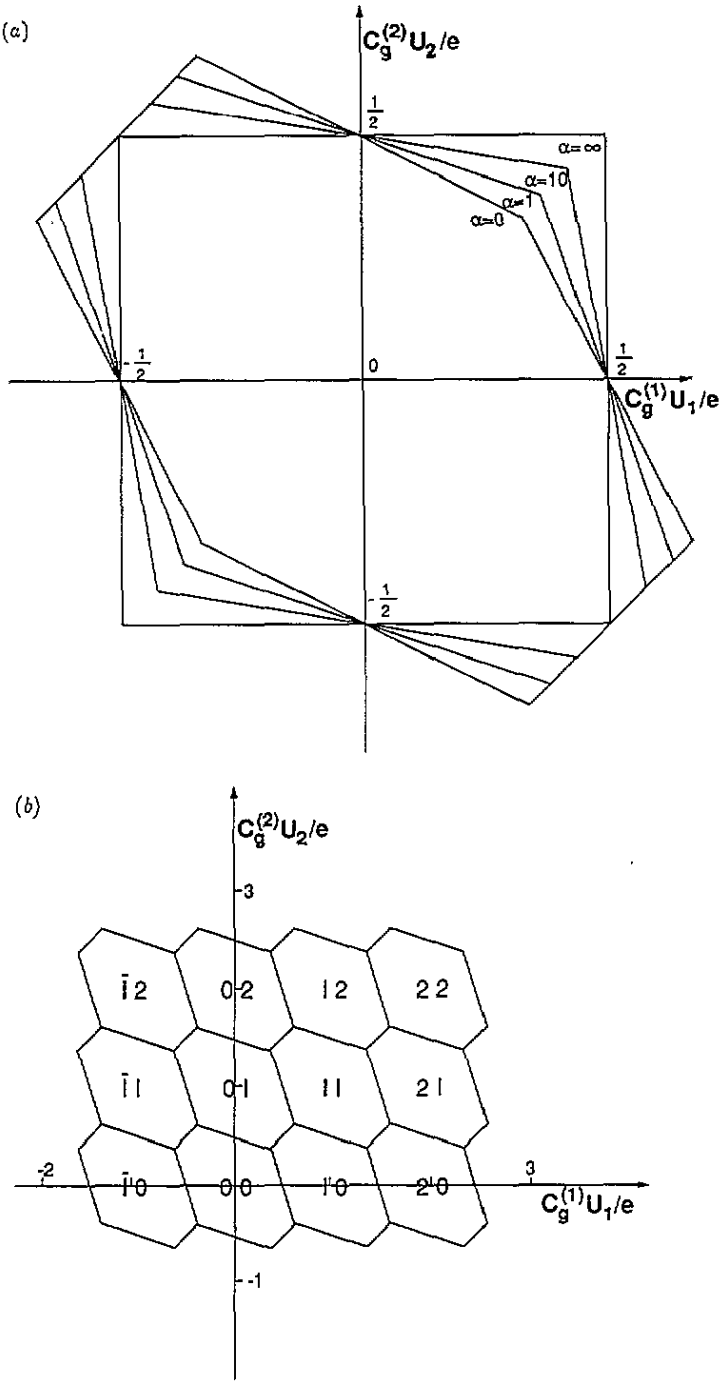

Figure 2. Stable domain (n_1, n_2), where n_1 and n_2 are the numbers of excess electrons on the first and second islands respectively, in the gate voltage U_1–U_2 plane for (N = 3)-gated-small-junction systems with equal junction capacitances C_j and equal gate capacitances C_g: (*a*) a single stable domain at various values of $\alpha \equiv C_g/C_j = 0, 0.1, 1, 10, \infty$; (*b*) an example of a global view of the stable domains: $\alpha = 1$.

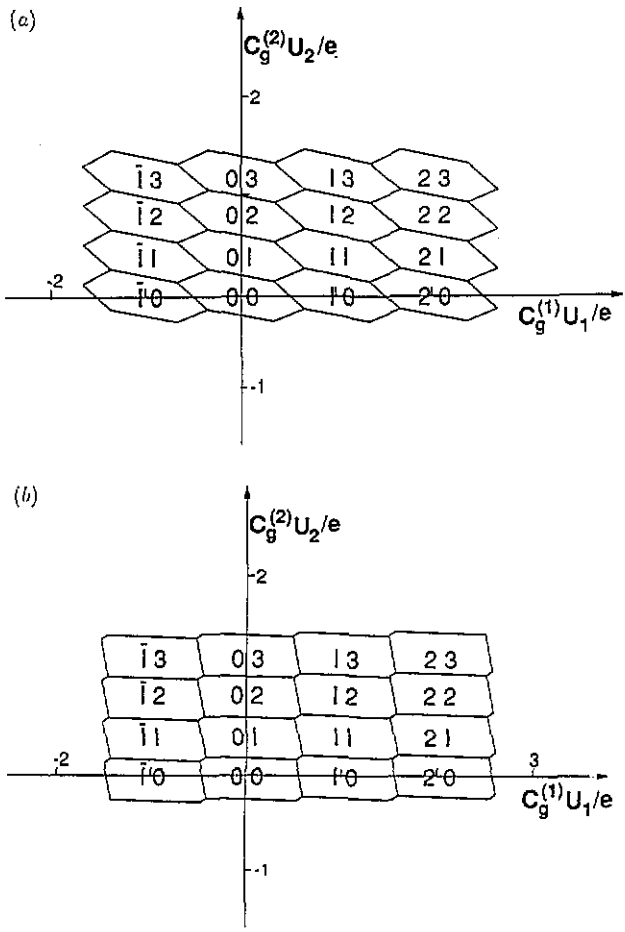

Figure 3. Stable domain (n_1, n_2), where n_1 and n_2 are the numbers of excess electrons on the first and second island respectively, in the gate voltage U_1–U_2 plane for (N = 3)-gated-small-junction systems with equal junction capacitances C_j and unequal gate capacitances $C_g^{(1)}$ and $C_g^{(2)}$: (*a*) $C_g^{(1)}/C_j = 0.1$, $C_g^{(2)}/C_j = 0.25$; (*b*) $C_g^{(1)}/C_j = 10$, $C_g^{(1)}/C_j = 25$.

4. Summary

In this paper, we have presented an analytical expression (2.1) (supplemented by (2.14)), for the charges on the junctions in an MGSJ system where the junctions are in series and connected through capacitors to gate voltages. Our analysis suggests that the charge expression (2.11) together with the energy change for any (say the ith) junction, $\Delta E_i^{(i\pm)}$ of (2.15), due to the tunnelling of an electron through that particular junction, provide a full description of the Coulomb blockade phenomenon for the system at $T = 0$. For the two-junction ($N = 2$) case, our result reduces to the well known results (2.16)–(2.18) for the single-electron transistor. When $N = 3$, we obtain general results (2.19)–(2.22), which reduce for the case of equal junction capacitance C_j to the simple forms (3.5)–(3.7). Based on (3.5)–(3.7), we find that the shape of a stable domain for the Coulomb blockade of a $N = 3$ MGSJ system at $T = 0$ depends strongly on the relative values of α and β ($\alpha = C_g^{(1)}/C_j$, $\beta = C_g^{(2)}/C_j$). For any given value of α and β, a fixed shape of stable domain fills

the entire gate voltage (U_1–U_2) plane with rectangular translational symmetry, where the central coordinates of each domain take the values of $(n_1, \alpha n_2/\beta)$ in the $C_g^{(1)}U_1/e$–$C_g^{(2)}U_2/e$ plane. The general formula is applied to analyse the stable domains for the single electron pump and the double-semiconductor-dot systems. For the single electron pump, we give a quantitative analysis for the distance x_p between two neighbouring triple points in the domain plane. For the double-dot system we show that when $C_g^{(1)}/C_g^{(2)}$ is an irrational number the conductance G oscillates non-periodically but in a predictable way. We expect the general solution for the MGSJ system presented in this paper to be useful for the analysis of single-electron devices with four or more junctions.

Acknowledgment

The work was supported in part by the US Office of Naval Research under grant No N00014-90-J-1124.

References

[1] Grabert H and Devoret M H (ed) 1991 *Single Charge Tunnelling (NATO ASI Ser. B: Physics)* (New York: Plenum)
[2] Ingold G L and Nazarov Yu V 1991 *Single Charge Tunnelling (NATO ASI Ser. B: Physics)* ed H Grabert and M H Devoret (New York: Plenum) p 21
[3] Esteve D 1991 *Single Charge Tunnelling (NATO ASI Ser. B: Physics)* ed H Grabert and M H Devoret (New York: Plenum) p 109
[4] Delsing P 1991 *Single Charge Tunnelling (NATO ASI Ser. B: Physics)* ed H Grabert and M H Devoret (New York: Plenum) p 249
[5] Fulton T A and Dolan G J 1987 *Phys. Rev. Lett.* **59** 109
[6] Kuz'min L S and Likharev K K 1987 *Pis. Zh. Eksp. Teor. Fiz.* **45** 389 (Engl. Transl. *JETP Lett.* **45** 495)
[7] Lafrage P, Pothier H, Williams E R, Esteve D, Urbina C and Devoret M H 1991 *Z. Phys.* B **85** 327
[8] Geerligs L J, Anderegg V F, Holweg P, Mooij J E, Pothier H, Esteve D, Urbina C and Devoret M H 1990 *Phys. Rev. Lett.* **64** 2691
[9] Pothier H, Lafarge P, Orfila P F, Urbina C, Esteve D and Devoret M H 1991 *Physica* B **169** 573
[10] Jensen H D and Martinis J M 1992 *Phys. Rev.* B **46** 13 407
[11] Ruzin I M, Chandrasekhar V, Levin E I and Glazman L I 1992 *Phys. Rev.* B **45** 13 469
[12] Amman M, Ben-Jacob E and Mullen K 1989 *Phys. Lett.* **142A** 431